VOODOO LAB PEDAL POWER

User's Manual

Please visit our web site at:

www.voodoolab.com

Copyright ©1998 by Digital Music Corporation.

This publication is protected by copyright and all rights are reserved. No part of it may be reproduced or transmitted by any means or in any form without the express prior consent in writing from Digital Music Corporation.

Voodoo Lab and Pedal Power are trademarks of Digital Music Corp.

Introduction

The Voodoo Lab Pedal Power is the finest power supply available for pedal effects. The Pedal Power provides eight 9V outputs which will power any type of battery operated effects. Each output is completely isolated, short-circuit protected, highly filtered and regulated. This insures reliable operation, free of hum and noise.

Please take the time to read this entire manual before operating your Voodoo Lab Pedal Power. This will eliminate the possibility of damage to your effects from improper usage. You can also visit our web site at www.voodoolab.com for the latest information on this and other products.

Unpacking

Your Voodoo Lab Pedal Power box should contain the following:

Pedal Power system unit.

User's manual.

Warranty card.

AC power cord.

DC Power cables:

- 5.5x2.1mm barrel connectors (5)
- 3.5mm mini plug (2)
- 9V battery snap (1)

Please take a moment to fill out and mail your warranty card. This will register your warranty, make you eligible for technical support, and allow us to notify you with updates and new product information. Don't worry, we respect your privacy and never sell our mailing list.

System Unit Description

1. AC power input jack. This is a standard "IEC-type" connector.

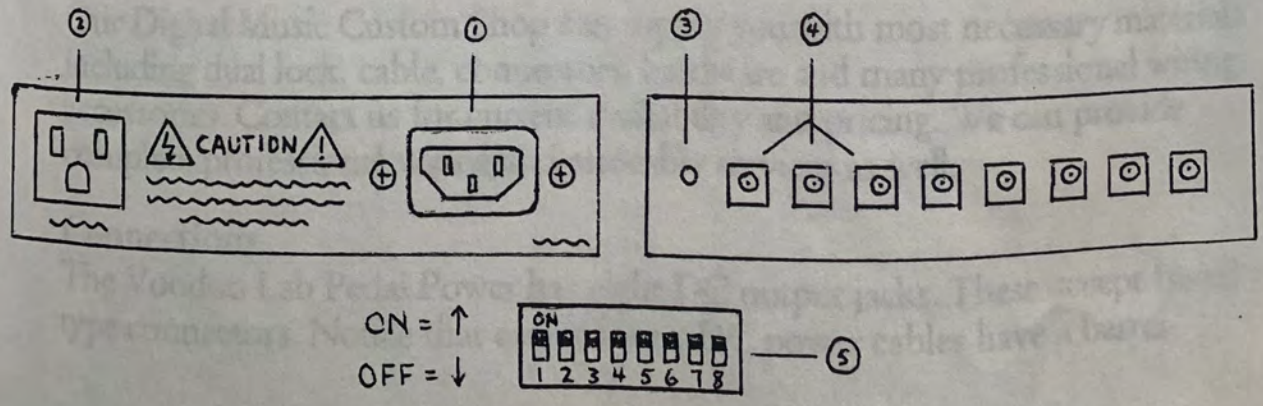

2. AC auxiliary. This is a courtesy AC outlet for convenient powering of AC powered effects or a MIDI foot controller. Note the 200 watt maximum rating. Do NOT plug in your amp here!
3. Power indicator. This LED indicates the Pedal Power system unit is operating.
4. DC output jacks (8). Each output provides 9 volts of isolated, filtered and regulated DC power for your pedal effects.
5. Voltage selector DIP switches. These switches select between 9V and the higher voltage required to operate Boss effects that specify "ACA-type" power supplies. Switches 1-8 correspond to DC outputs 1-8. Normal 9V operation is with the switch in the "ON" position.

About Pedal Boards

Before connecting the Pedal Power to your pedals, let's talk about pedal boards. The best installation is to mount your pedals and power supply to a suitable pedal board. You can use anything from a piece of plywood to a professionally built unit available from our Digital Music Custom Shop or any reliable supplier of road cases. Securely mounting your effects and power supply will make it easy to transport without damage and eliminates excessive flexing of cables which will cause their premature failure.

Most devices (pedal effects, power supply, tuner, volume pedals, wah, etc.) can be mounted to the pedal board using an industrial adhesive-backed velcro such as 3M dual lock. Audio cables should be as short as possible. You can use off-the-shelf patch cords, or better yet, make your own exactly to length. If you don't know how to solder, another option is using solderless connectors like the "George L's".

Once the cables are all neatly routed, finish the job by securing them with nylon cable ties and cable tie mounts. If you constructed the board itself, heavy duty rubber feet and metal handles are useful and will give a professional appearance.

Our Digital Music Custom Shop can supply you with most necessary materials including dual lock, cable, connectors, hardware and many professional wiring accessories. Contact us for current availability and pricing. We can provide complete professional wiring and assembly services as well.

Connections

The Voodoo Lab Pedal Power has eight DC output jacks. These accept barrel type connectors. Notice that each of your DC power cables have a barrel

connector on at least one end. The other end has either another identical barrel connector (4 supplied), a 3.5mm mini-plug (3), or a battery snap (1).

Use the barrel connector cables with Boss, DOD, Ibanez, Prescription, Way Huge and some newer Voodoo Lab pedals. If you have a pedal from another manufacturer which appears to use the same connector, you must verify that the polarity is "center negative" to prevent damage to the pedal. This is the standard polarity and virtually all pedals are wired this way. Some Fulltone models do not conform to this standard and have their power jacks wired backwards. If you have any Fulltone or other pedals with reversed polarity, see "More About Cables" below.

Use the cables with 3.5mm mini plugs for Dunlop, MXR reissue and most Voodoo Lab pedals. When using pedals of another manufacturer, you must verify that the polarity is "tip positive". This is the standard polarity for pedals which use the 3.5mm mini plug for power. If you have a pedal with reversed polarity, see "More About Cables" below.

If you have a pedal which has no power jack at all, but it runs on a single 9V battery, you can still power it using your Voodoo Lab Pedal Power. Use the cable with the 9V battery snap on one end. This will mate with the battery snap inside your pedal once its battery has been removed.

Voltage Selector DIP Switches

On the bottom of the Pedal Power is an 8 position DIP switch with switches numbered 1-8. These switches correspond to DC Outputs 1-8 and select the output voltage. Normally, they should all be in the "ON" position for 9 volt operation. The only exception is for some Boss pedals.

Boss Pedals

There are two types of Boss pedals. These are identified by the type of power supply specified, either PSA or ACA. Boss pedals specifying the PSA type adapter operate at 9V like most other pedals. Boss pedals which specify the ACA type adapter operate at a higher voltage. When powering Boss pedals that require ACA adapters you must switch the corresponding Voltage Selector DIP Switch on the Voodoo Lab Pedal Power to the "OFF" position.

For example, let's say you have a Boss CS-3 Compressor/Sustainer. Next to the power jack is a sticker which says "Use BOSS ACA adapter only". You are connecting a barrel connector cable from Pedal Power DC Output #3 to the CS-3 power jack. Since the CS-3 specifies an ACA type adapter, you must set Voltage Selector DIP Switch #3 on the bottom of the Pedal Power to the "OFF" position.

More About Cables

The DC power cables supplied with your Voodoo Lab Pedal Power are suitable for most common pedal effects. If you need additional cables they are available directly from Digital Music. If you need cables of a different length, with reversed polarity, or with a special connector, contact us and we can provide them for you.

Operation

Using the above information, connect the DC power cables between the Pedal Power DC outputs and the power jacks on your pedal effects. Now connect the AC power cord from the AC Power Input jack on the Pedal Power to a suitable AC outlet. The Pedal Power's red LED power indicator should light telling you that it's working properly.

Frequently Asked Questions

If you have any questions, this is the first place to look!

Why is the LED on my Boss pedal so dim?

Check to see if your Boss pedal is supposed to operate with an ACA type adapter. It will say this either on a sticker near the power jack, or on the bottom plate. You need to operate this pedal at a higher voltage by setting the appropriate Voltage Selector DIP Switch on the bottom of the Pedal Power to the "OFF" position. See the section above "Boss Pedals".

Can the Pedal Power fit in a rack?

The height of the Pedal Power was intentionally kept to 1-3/4 inches so that it can fit in one rack space. When we build pedal switching racks in our Digital Music Custom Shop, we usually mount the Pedal Power along with the pedal effects on a sliding shelf.

What if my pedal uses reversed polarity (positive ground)?

Because the Pedal Power has each of its DC outputs isolated, it doesn't matter whether your pedals are negative or positive ground. What *does* matter is that the power jack has the correct polarity. The barrel connectors provided are for center negative and the 3.5mm mini plugs are for tip positive. If your pedal is different from this, contact Digital Music to obtain the correct cable.

Doesn't my pedal need a 200mA power supply?

Not if it runs on a standard 9V battery. The adapter available from the pedal's manufacturer may be able to supply up to 200 or 300mA, but pedal effects which will run on a battery will not draw more than about 65mA.

Can I use the Pedal Power instead of the AC adapter for my processor or MIDI pedal?

No. The Pedal Power is intended to run only pedal effects which are normally powered by 9V batteries, so it will only provide a maximum of 80mA per output. You can plug the AC adapter supplied with your processor or MIDI pedal into the Pedal Power's AC auxiliary outlet.

Can I power my pedal which requires 18V (uses two 9V batteries)?

Yes. Because the Pedal Power's outputs are individually isolated, you can wire two of them in series for 18V. Be sure to observe proper polarity. Digital Music can provide you with a custom cable to do this.

How can I get additional DC power cables?

Contact Digital Music to obtain additional cables.

What if I need a special cable?

Our Digital Music Custom Shop can provide any cable you need.

What is a toroidal transformer and why does my Pedal Power have one?

Power transformers create an electric field that can cause hum and noise in your effects. A toroidal transformer has a specially designed core that greatly reduces this electric field. The Pedal Power uses this type of transformer so that your pedal board is quiet.

Specifications

Input:	IEC connector
	120V 60Hz (North America)
	100V 60Hz (Japan)
	230V 50/60Hz (Europe/Australia)
Outputs:	Eight 5.5x2.1mm barrel connectors with center negative
	Individually selectable between 9V @ 80mA and 13.2V
	Short circuit protected
Physical:	6" wide x 3.4" deep x 1.75" tall (152x86x45mm)
	Weight 2 lbs. (0.9 kg)
Special:	Toroidal power transformer
	Auxiliary AC outlet, 200 watts max.

Warranty

Digital Music warrants this product against defects that are due to faulty material or workmanship for a period of five years from the date of original retail purchase. This warranty does not include damage to the product resulting from accident or misuse. This warranty is given to the original purchaser only and it is not assignable to any other person.

If the product should become defective within the warranty period, Digital Music will repair it or replace it free of charge, provided it is returned freight prepaid to Digital Music with a valid RMA (return material authorization) number.

This warranty shall not apply to any goods that have been repaired or altered by anyone other than the manufacturer. There are no warranties which extend beyond the terms described herein.

Should you experience any difficulty with this Digital Music product, contact us as described below. If it is determined that the product must be returned to the factory for repair, you will be issued an RMA and given shipping and packaging instructions.

How to Reach Us

All Voodoo Lab products are manufactured by Digital Music. You can reach us by any of the following:

Tel: 707 782 0600 or 800 986 6696

Fax: 707 782 9777

Mail: Digital Music/Voodoo Lab
1320A Industrial Avenue, Petaluma, CA 94952

Email: info@voodoolab.com

Website: www.voodoolab.com

Copyright 1998 by Digital Music Corporation – Printed in U.S.A.